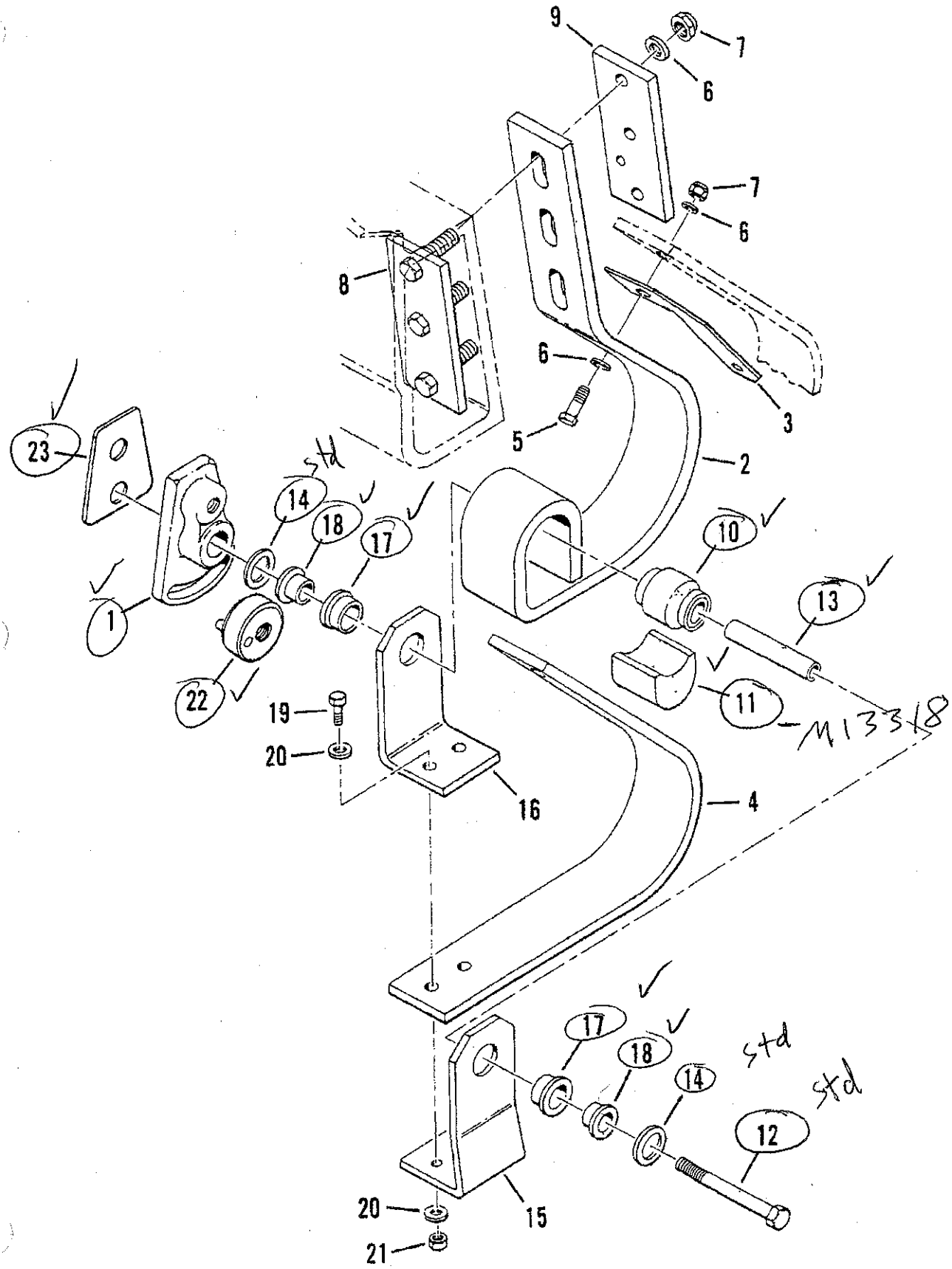
9
7
6
7
6
8
6
5
3
2
23
std
14
18
17
10
13
1
22
11
M13318
19
20
16
4
17
18
std
14
std
12
20
15
21